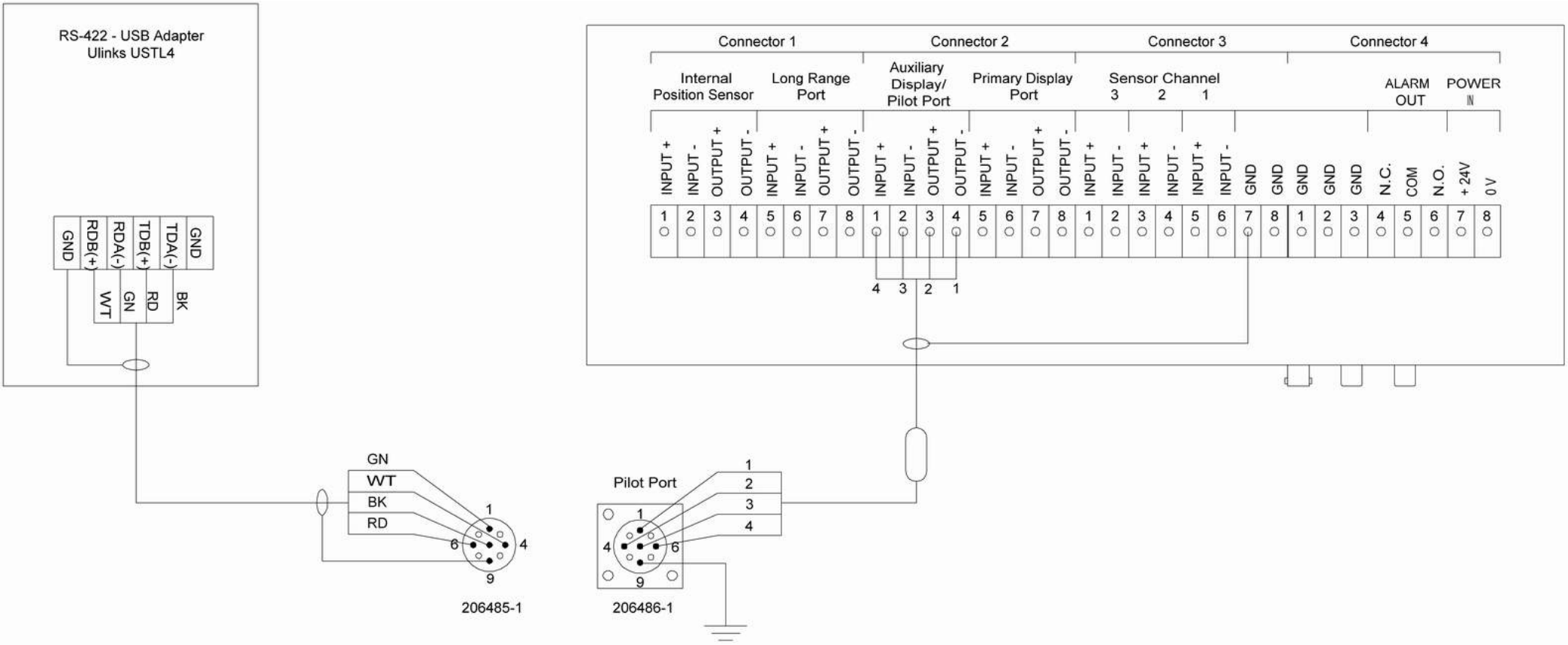
RS-422 - USB Adapter
Ulinks USTL4
GND
RDB(+)
RDA(-)
TDB(+)
TDA(-)
GND
WT
GN
RD
BK
Connector 1
Connector 2
Connector 3
Connector 4
Internal Position Sensor
Long Range Port
Auxiliary Display/ Pilot Port
Primary Display Port
Sensor Channel
3 2 1
ALARM OUT
POWER IN
INPUT +
INPUT -
OUTPUT +
OUTPUT -
GND
N.C.
COM
N.O.
+ 24V
0 V
GN
WT
BK
RD
206485-1
Pilot Port
206486-1